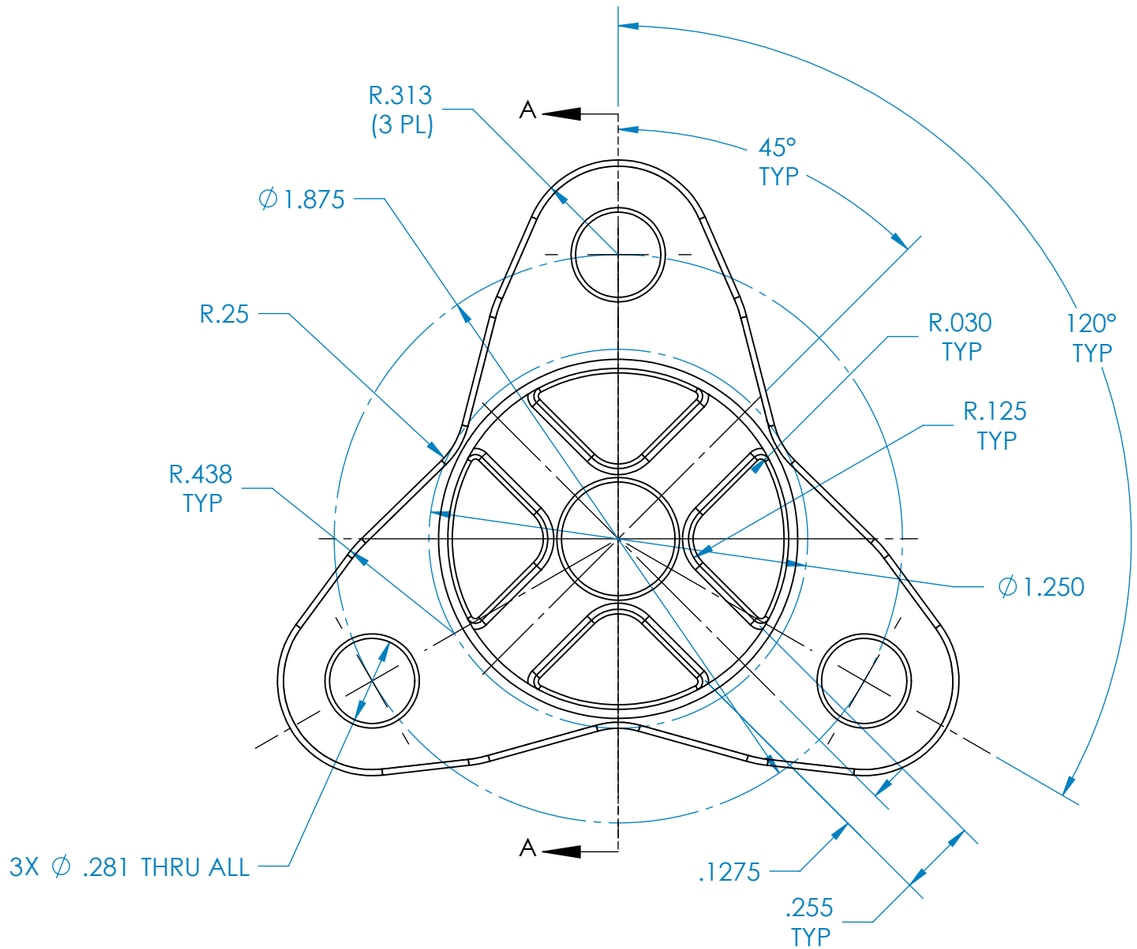


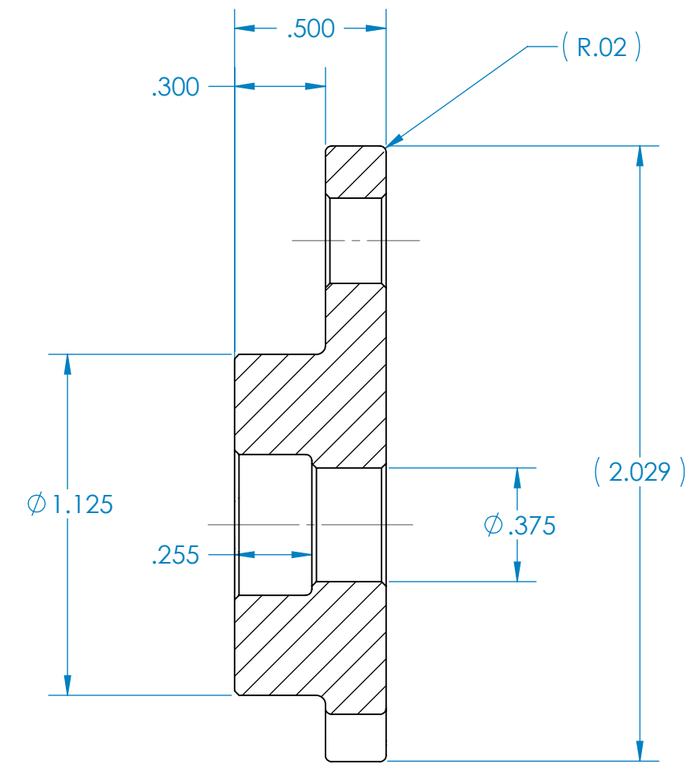


SECTION A-A
SCALE 2 : 1

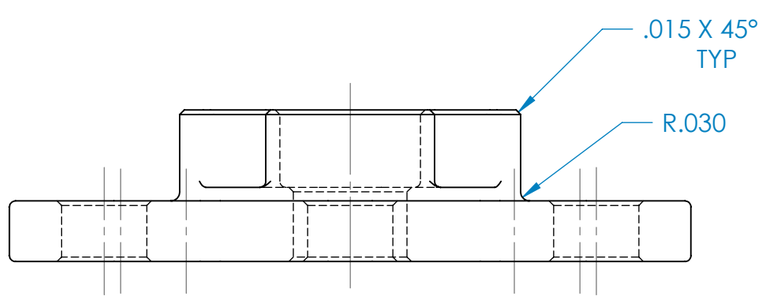


| UNLESS OTHERWISE SPECIFIED: | | NAME | DATE | VICA |
|---|---|---|---|---|
| DIMENSIONS ARE IN INCHES<br>TOLERANCES:<br>FRACTIONAL ±<br>ANGULAR: MACH ± BEND ±<br>TWO PLACE DECIMAL ±<br>THREE PLACE DECIMAL ± | DRAWN | | 4/08/09 | TITLE: |
| | CHECKED | | | |
| | ENG APPR. | | | |
| | MFG APPR. | | | |
| INTERPRET GEOMETRIC TOLERANCING PER: | Q.A. | | | |
| MATERIAL | COMMENTS: | | | SIZE B / DWG. NO. vica-2009 / REV |
| FINISH | | | | |
| DO NOT SCALE DRAWING | | | | SCALE: 2:1 / WEIGHT: / SHEET 1 OF 1 |